REACH ROBOTICS

REACH ALPHA

INTEGRATION MANUAL | V5.0

CONTENTS

1 BENCH SETUP AND ACCEPTANCE TEST

1.1 BENCH TEST

Prior to vehicle integration activities, a bench level test is recommended. This builds familiarity from the ground up and assists with product acceptance. The following procedure walks you through the bench setup procedure.

You Will Need:

- Reach Alpha Product
- Supplied Break-out Board, Power Cable and USB-MicroUSB Cable
- Reach Control Software
- PC or Laptop running Windows

1.1.1 Physical Interfacing

1. Remove the manipulator and stand from the transport case and place on the bench. Loosen the mount locking ring, rotate the manipulator 90 degrees to the upright position, align the pins and re-tighten the locking ring.

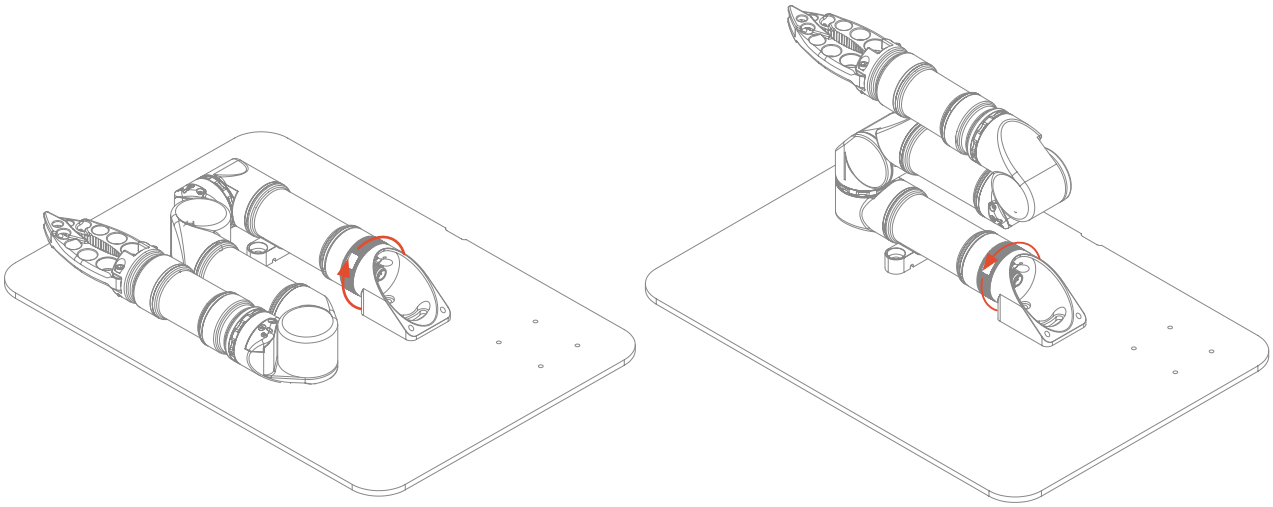

2. Connect the Impulse Connector to the base of the manipulator.

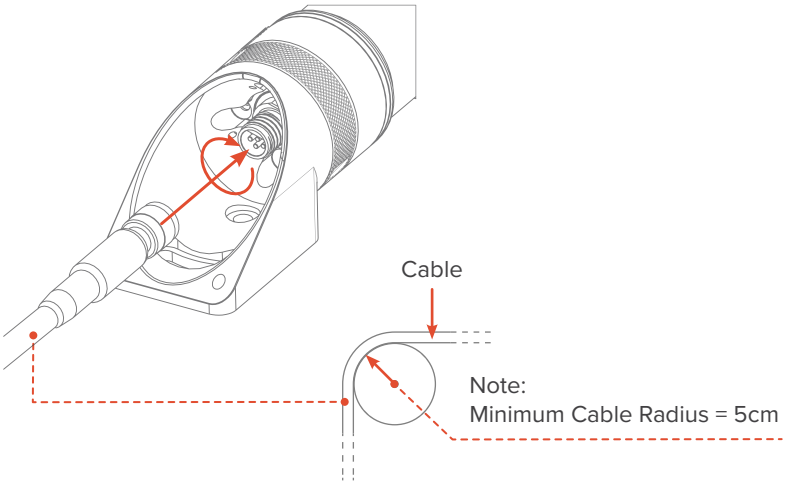

3. Plug the micro-USB into the Break-out Board. Attach power connection.

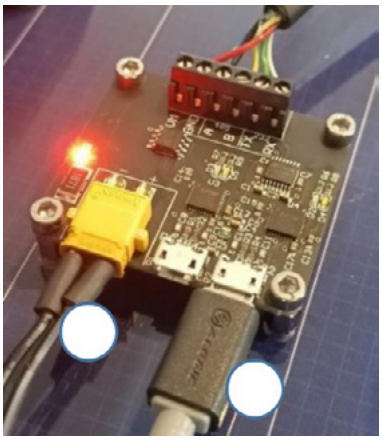

4. Plug the USB end into the computer.

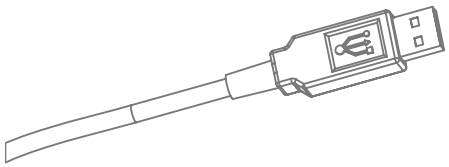

5. Turn on the power at the wall socket. The red LED on the breakout board will illuminate. This completes the mechanical setup procedure..

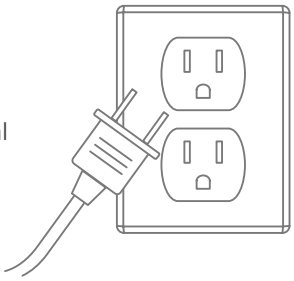

1.1.2 Reach Control

Reach Control will be provided to you digitally via email as well as on a USB within the Hard Carry Case.

1. Install Reach Control.
2. Open Reach Control > Settings (cog icon) > Ports > Add.
   Click the new port. Name your device.
   Select the COM port (e.g. COM48) that the arm is communicating on.

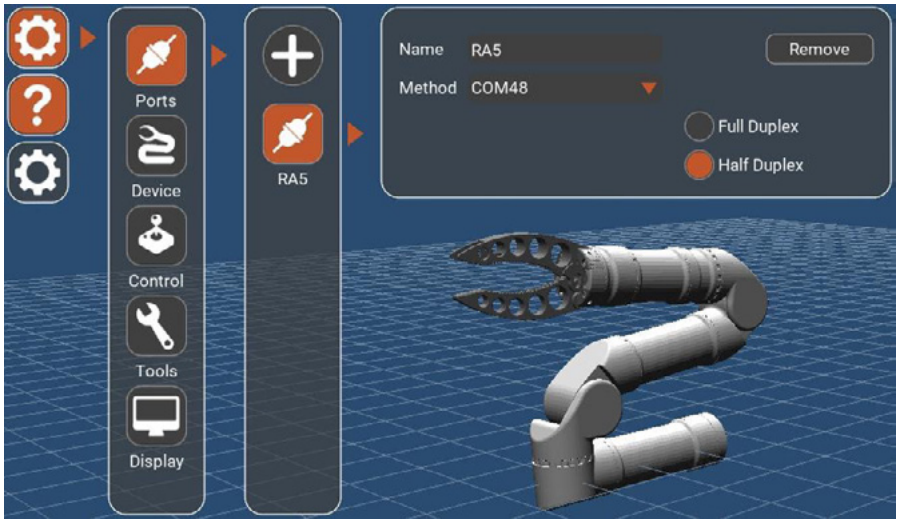

3. Click Settings (cog icon) > Device
   Select the existing device (or click Add if none exist). Select the name of the port just created. Select the type of manipulator (e.g. Alpha 5).

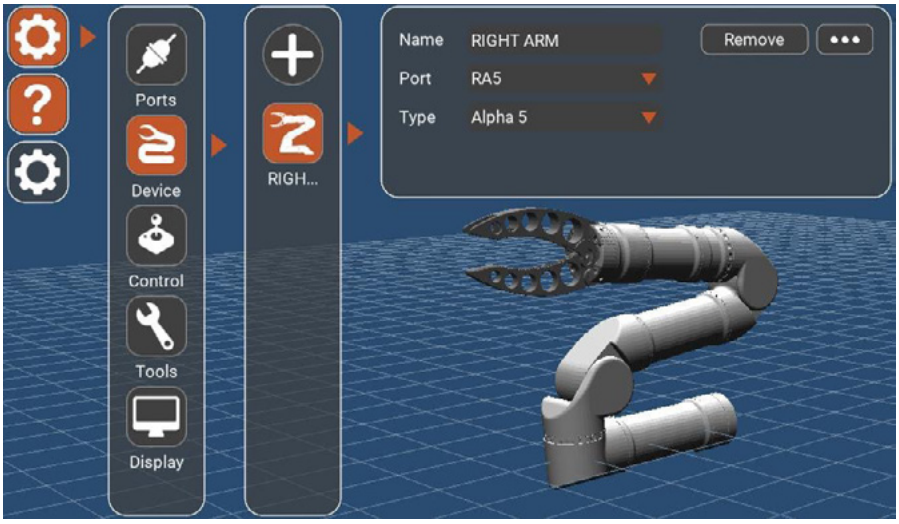

4. If the Alpha is set up correctly, the 3D model in the background will update to reflect the physical position of the manipulator.
5. Navigate the 3D model with the following mouse operations:
   - Rotate View – Left mouse + Drag.
   - Translate View – Right mouse + Drag.
   - Zoom – Scroll wheel.
6. The device is now connected. Continue to 1.2 Acceptance Test.

1.2 ACCEPTANCE TESTS

1.2.1 Range Of Motion Test

1. On the control panel in the bottom right of Reach Control, click the Velocity button. Directional arrows will appear on the 3D model.

2. Click Settings (cog icon) > Display > Feedback. The monitoring panel will open at the bottom of the screen. Clicking on any of the graphs will bring up the numeric values for each joint.

3. **Making sure it is safe to do so**, use the directional arrows in the 3D model of the arm to rotate each joint.

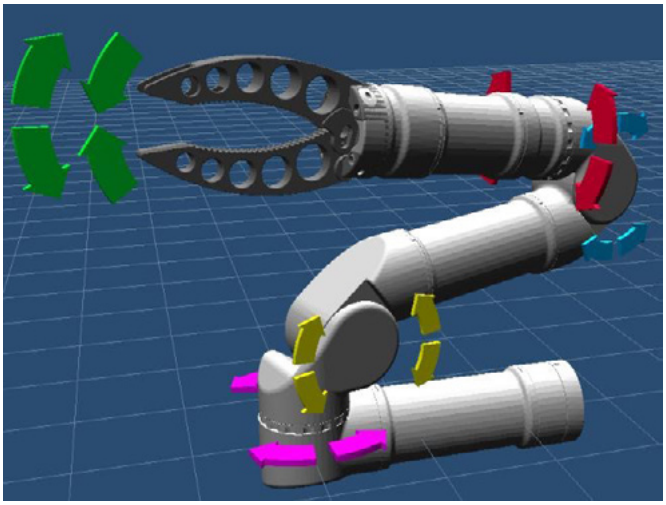

4. All Alpha products are shipped with a virtual obstacle to prevent collision with the ‘floor’ under the base of the manipulator.

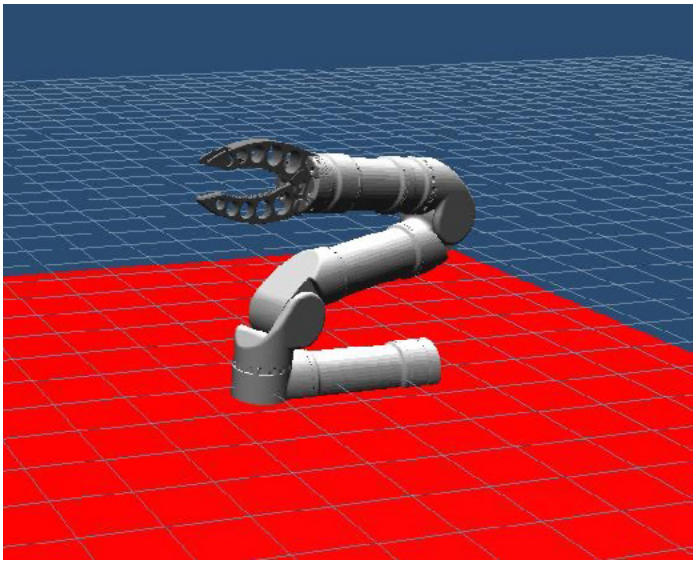

5. Move each joint for a few seconds in each direction. Ensure movement is as expected and corresponds with control input.

This completes the Range of Motion Test.

1.2.2 Master Arm Test (If Applicable)

1. Screw the stand provided into the base of the Master Arm. The thread in the base is a standard 1⁄4-20 UNC camera tripod thread to allow the use of commercially-available camera accessories.

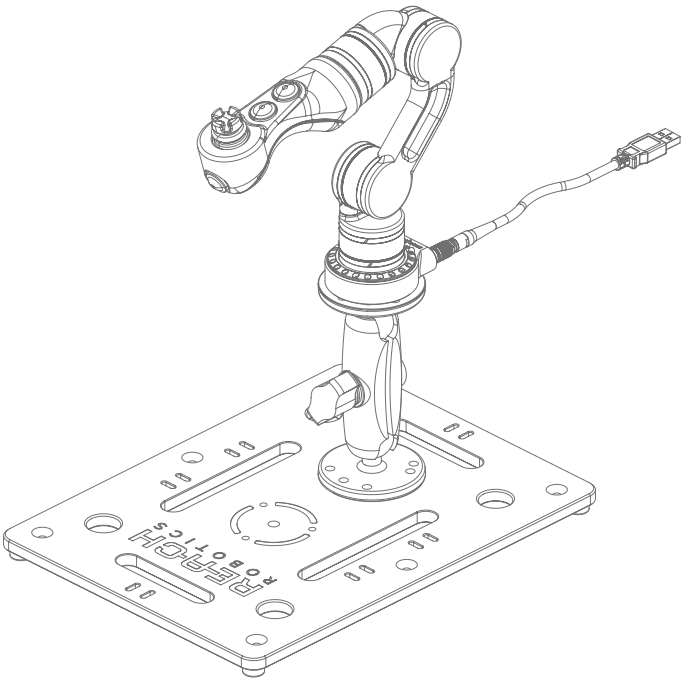

2. Plug the LEMO connector in the base of the Master Arm and connect the cable to the computer via the USB connector.

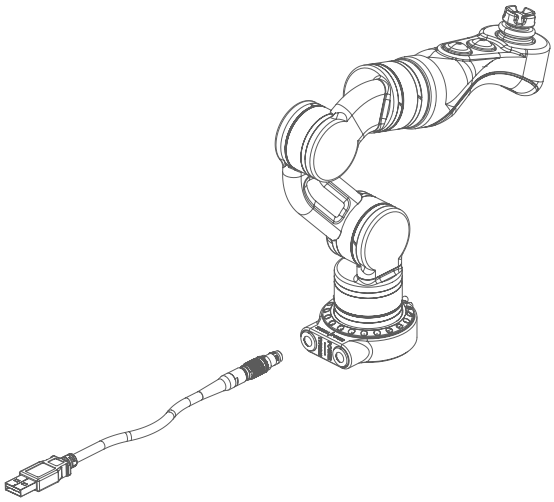

3. Once powered, the Master Arm buttons will flash blue.

4. Open Reach Control, Settings (cog icon) > Ports > Add.
   Assign the new port a name and select the COM port the Master Arm is communicating on. Ensure that Half Duplex is selected.

5. Settings (cog icon) > Control.
   If there is no Master Arm option underneath Spacemouse, click Add.
   Assign the new control port a name. Set 'Port' to the name of your Master Arm port. Set 'Device' to the name of the slave arm you wish to control.

6. The Master Arm is now ready to control the slave manipulator.
   Making sure it is safe to do so, press the Master Arm Pause Button to activate the Master Arm. The flashing blue lights should become steady.
   Double tap the Pause Button to deactivate the Master Arm.

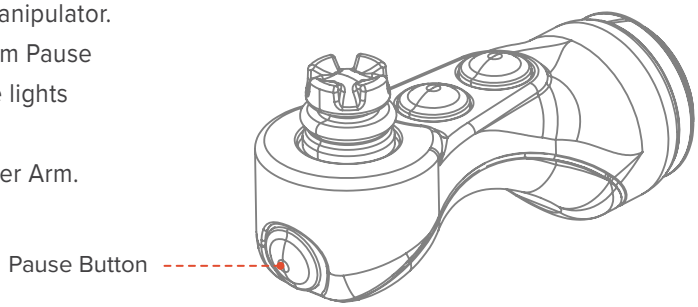

7. Move each Master Arm joint through its full range of motion.

   Note: The B joint can be controlled by either the joystick or the rotate function of the handle. See Reach Control manual for more information.

   Check that:

   a. The corresponding joint on the slave arm responds.
   b. The joint moves in the correct direction.
   c. The motion of slave to master is a 1-to-1 ratio.
   d. The motion is smooth and complete.

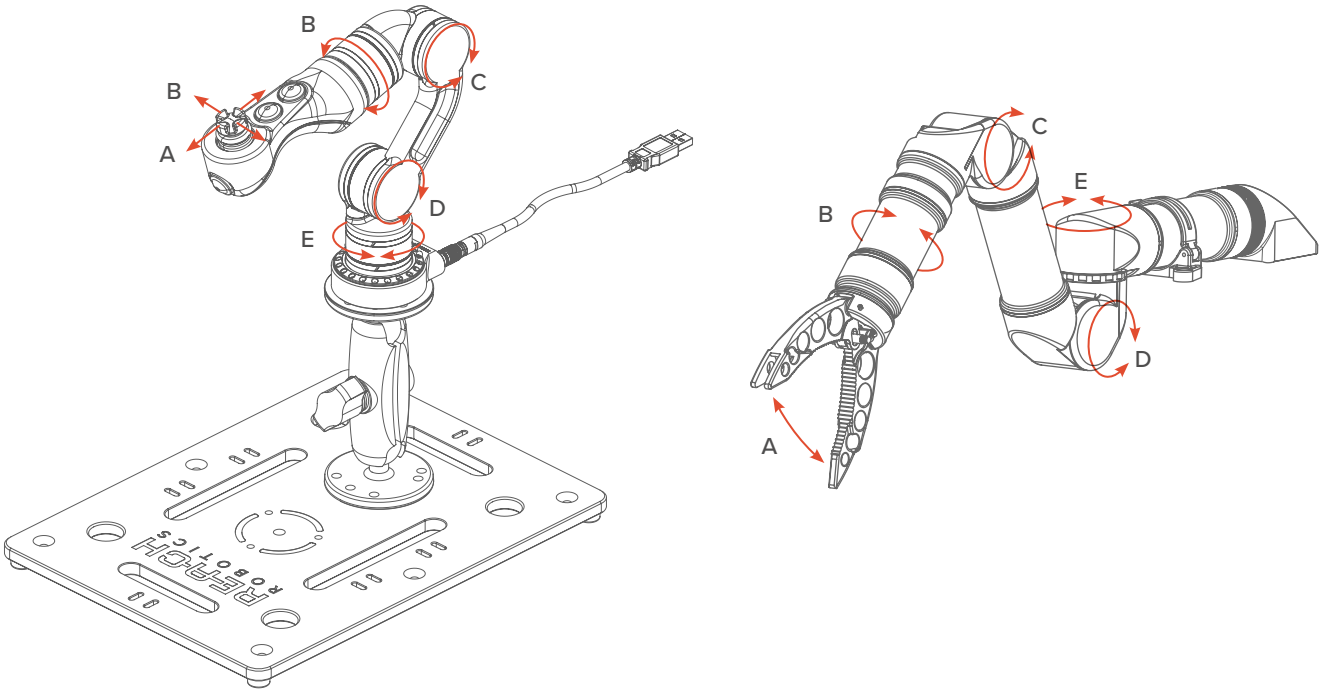

8. Press and hold the Stow Button, ensure the arms stows completely. Release the button to stop the movement. Repeat for the Deploy Button.

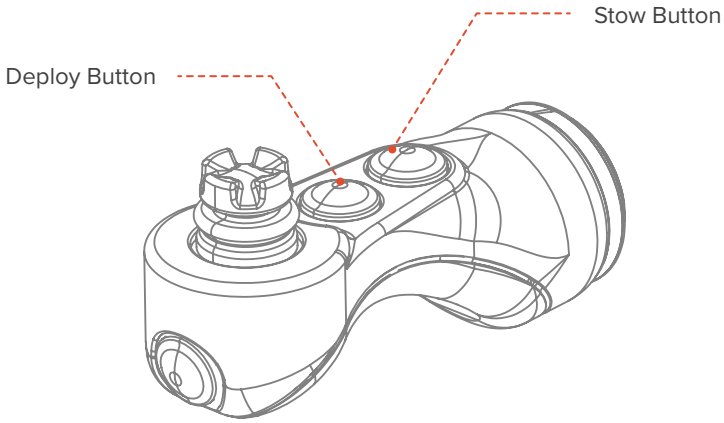

9. Whilst moving the arm, press and hold the Pause Button, ensuring the arm stops responding whilst the button is held down. Releasing the button will engage movement again.

This completes the acceptance test for the Alpha and Master Arm.

2 PRODUCT OVERVIEW

The Reach System is the world's smallest, lightest subsea manipulator system. We designed this advanced manipulator to open new possibilities for remote intervention and inspection in harsh environments. This manual predominantly applies to the Alpha 5 (often termed 'manipulator' in this document) but applies more generally to other Reach Alpha actuators (e.g. 3 or 4-Function variants) as well.

2.1 MECHANICAL

- Modular by Design

The modular design allows for rapid OEM upgrades and repairs. Compatibility between modules increases reliability across the entire range and allows for ease of customization. Interchangeable end-effectors allow for quick mission-specific fit outs.

- Underwater Ready

The Reach Alpha is capable of operating at depths of 300m for extended periods of time. Each unit undergoes rigorous testing prior to shipping to ensure seal and structural integrity when operating in harsh environments. Our products have been validated by customers around the world and have logged over 1000 hours at depth.

- Full Control

Position, speed, and current feedback extends the Reach Alpha manipulator abilities to performing delicate tasks. Proprietary control algorithms ensure accurate response and enhanced control through multiple human machine interfaces.

- Small Size

A standard external diameter of 40mm and weight of less than 900g in water, the Reach Alpha provides unparalleled functionality for unmanned remotely operated vehicles where size and weight are critical.

2.2 AVAILABLE CONFIGURATIONS

Throughout this manual, actuators will be referred to by their product codes as listed below.

- **RA-1100** Inline Rotate
- **RA-1300** Grabber
- **RA-1400** 90 Degree Rotate
- **RA-2130** Rotating Grabber
- **RA-2140** Pan Tilt
- **RA-2221** Dual-Bend Probe & Brush
- **RA-3001** 3-Function Manipulator
- **RA-4001** 4-Function Manipulator
- **RA-5001** 5-Function Manipulator
- **RA-5002** 5-Function Inspection Tool

Alpha 5 | Five-Function Manipulator
RA-5001

Alpha 5 Inspector | Five-Function Inspection Tool
RA-5002

Alpha 3 | Three-Function Manipulator
RA-3001

Alpha 4 | Four-Function Manipulator
RA-4001

Alpha 90 Degree Rotate
RA-1400

Alpha Pan Tilt
RA-2140

Alpha Inline Rotate
RA-1100

Alpha Dual-Bend Probe & Brush
RA-2221

Alpha Grabber
RA-1300

Alpha Rotating Grabber
RA-2130

3 SINGLE/DUAL-FUNCTION GRABBERS & ROTATORS

3.1 SPECIFICATIONS

3.1.1 Mechanical

Specification	RS1-1100	RS1-1400	RS1-1300	RS1-2140	RS1-2130
Weight Air	200g	320g	220g	360g	360g
Weight Water	100g	220g	130g	220g	250g
Dimensions	98xΦ40mm	140xΦ40mm	103xΦ40mm	165xΦ40mm	117xΦ40mm
Torque/Force[1]	0.6Nm	10Nm	600N	10Nm/1Nm	0.6Nm/600N
Rate[1]	90-20°/s	60°/s	2.5mm/s	60°/s	60°/s / 2.5mm/s
Travel	360° Cont	360° Cont	22mm	330° x 360° Cont	330° x 22mm

[1] The rate and torque relationship can be configured to suit a specific application. Please contact us to discuss your solution.

3.1.2 Environmental

Specification	RS1-1100	RS1-1400	RS1-1300	RS1-2140	RS1-2130
Depth	300m Below Sea Level				
Temperature	-30°c to +45°C	-30°c to +45°C	-30°c to +35°C	-30°c to +35°C	-30°c to +35°C
Shock	200Gs/1ms				
Housing Material	Hard Anodised 6061 Aluminium				

3.1.3 Electrical

Specification	RS1-1100	RS1-1400	RS1-1300	RS1-2140	RS1-2130
Voltage Range[2]	18-30V DC				
Power(max)	6W	11W	6W	11W	11W
Communication	Full Duplex RS232 or Half Duplex RS485				

[2] The RS1 Series can operate as low as 10V. However, voltages below 18V will result in a decrease in max rate.

3.2 INTERFACING

3.2.1 Mechanical

All Alpha grabbers and rotators have the same mounting flange. This is to allow for easy integration of the entire range. Our tailormade mounting kit allows for the quick swap out between various components or the simple rotation of a single axis unit.

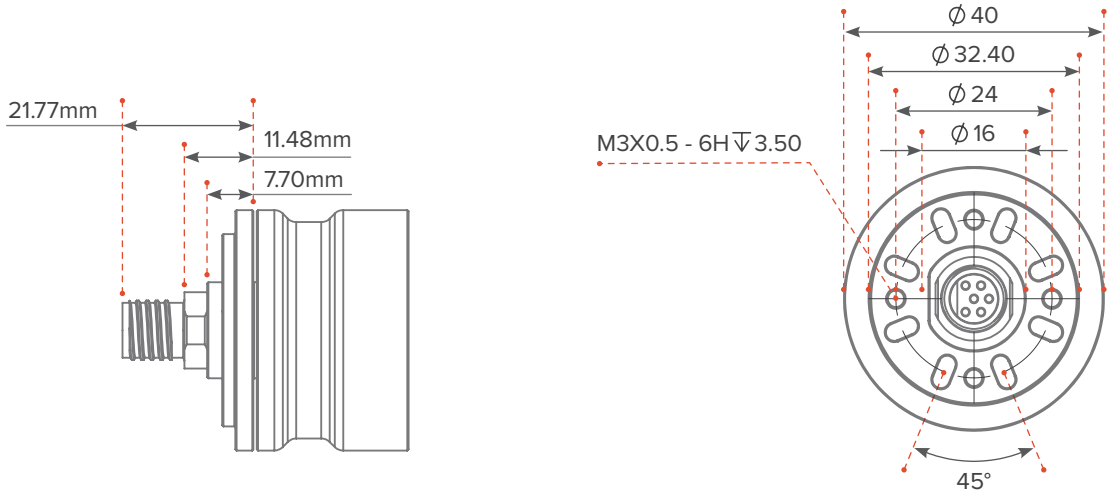

Figure 1: Mounting Flange Dimensions

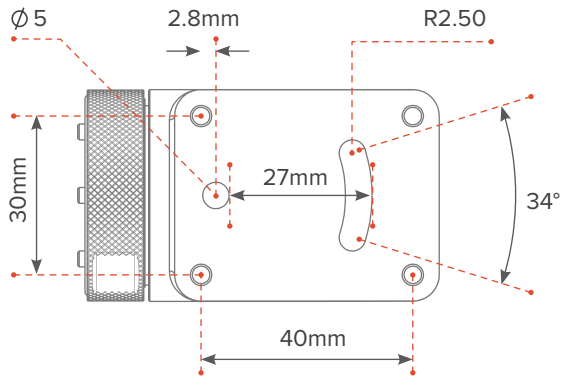

Figure 2: Mounting Kit Dimensions (Optional)

3.2.2 Electrical

The standard connector interface for the single/dual-function Alpha range is a 6-pin HUMG SeaConn connector. The mating connector is a 6-pin HUMG CCP. It is important that the serial device and the actuator share a common ground. Failing to do so could damage the device.

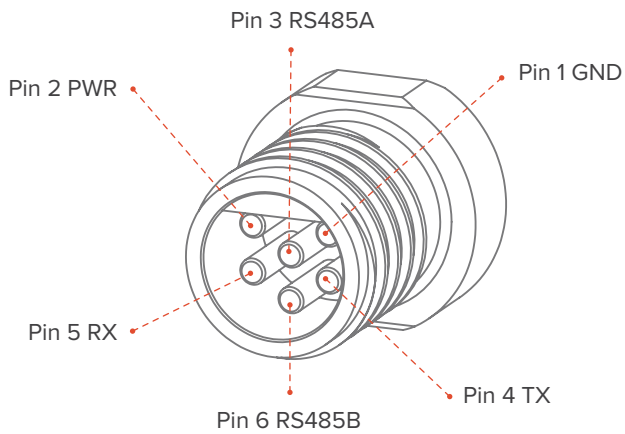

Figure 3: 6-pin HUMG SeaConn serial connector - Male Face View

4 REACH ALPHA 5

4.1 DIMENSIONS AND COORDINATES

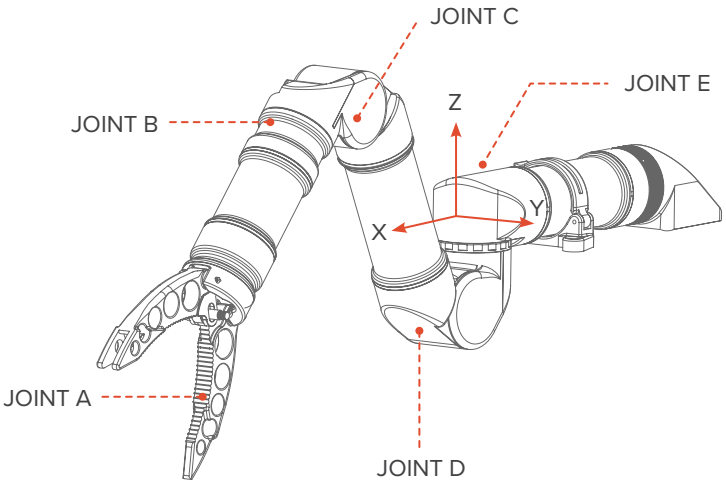

Figure 4: Joints and Origin

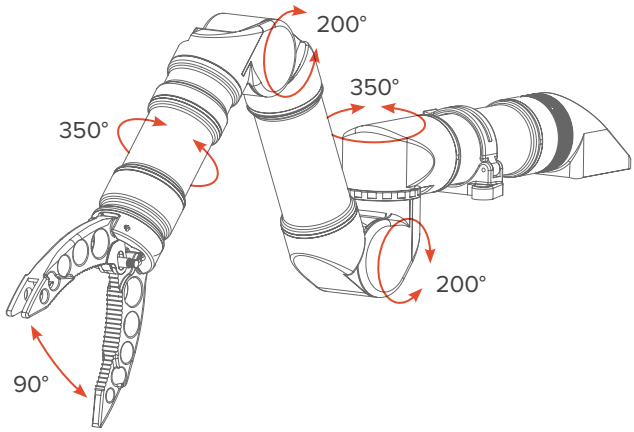

Figure 5: Joint Limits

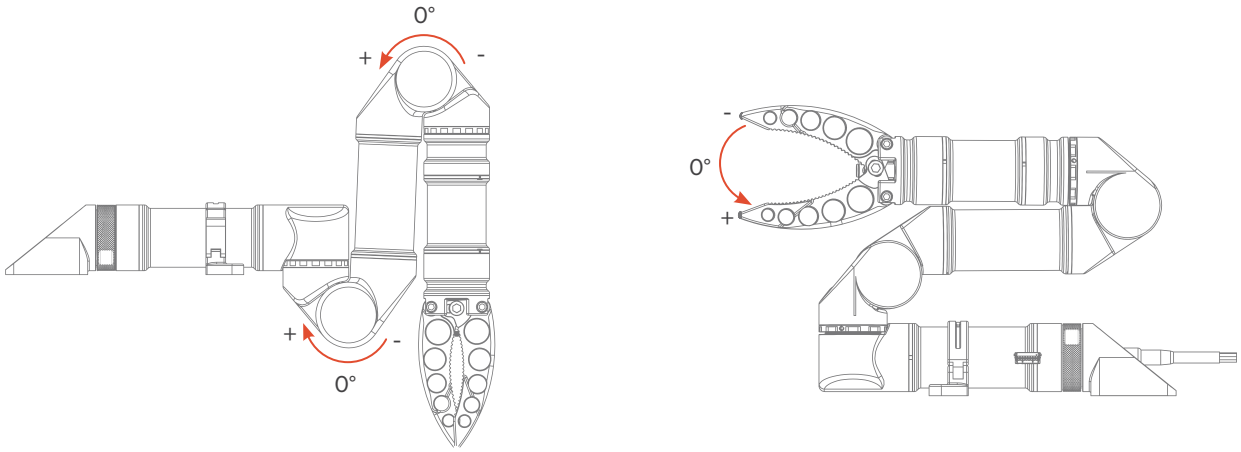

Figure 6: Zero Point travel/direction

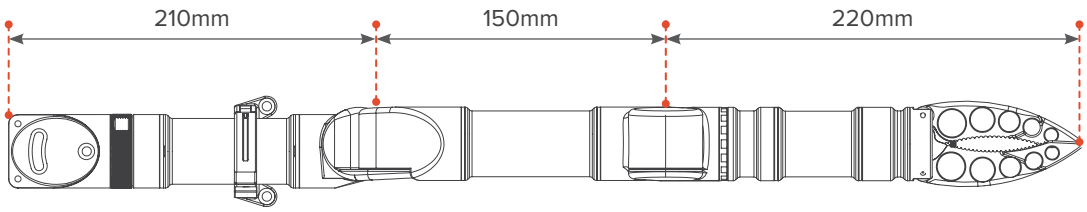

Figure 7: Axis Length

4.2 SPECIFICATIONS

4.2.1 Mechanical

Specification	Joint A	Joint B	Joint C	Joint D	Joint E
Weight Air	1250g				
Weight Water	880g				
Dimensions	570xΦ40mm (Mounting Base to Jaw Tip)				
Max Lift (Full Reach)	2Kg				
Torque/Force	600N	0.6Nm	10Nm	10Nm	10Nm
Rate	3mm/s	50°/s	30°/s	30°/s	30°/s
Travel	22mm	330°	200°	200°	350°

4.2.2 Environmental

Specification	Joint A	Joint B	Joint C	Joint D	Joint E
Depth	300m Below Sea Level				
Temperature	-10°c to +45°C				
Shock	200Gs/1ms				
Housing Material	Hard Anodised 6061 Aluminium				

4.2.3 Electrical

Specification	Joint A	Joint B	Joint C	Joint D	Joint E
Voltage Range	18-30V DC (Lower voltage is allowed, but will limit speed)				
Power(max)	35W				
Communication	Full Duplex RS232 or Half Duplex RS485				
Connector	Teledyne 6 Pin IE(W)-55 Impulse				

The Reach Robotics Github repository contains documents regarding the Kinematic and Dynamic properties of Reach System manipulators.

Available at: https://github.com/blueprint-lab

4.3 INTERFACING

4.3.1 Mechanical

The Reach Alpha offers a variety of mounting configurations. These are easily implemented using the supplied two-part mounting kit. This kit is designed to absorb moderate shock to help protect the Reach Alpha from external impact.

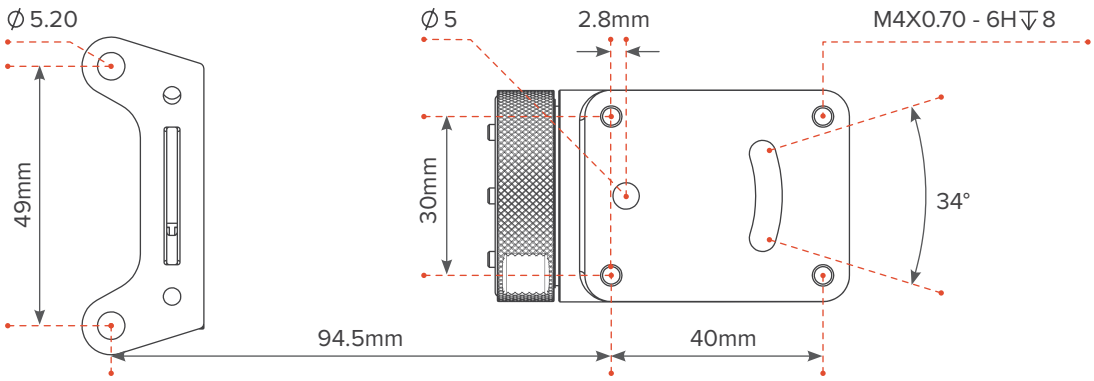

Figure 8: Dimensions of Mounting Kit

The manipulator is designed to be integrated onto different vehicle platforms. The following steps will ensure a safe and reliable installation on most unmanned vehicles. Specific instructions for installation on common ROV platforms may be available; please contact Reach Robotics Support for more information.

Step 1

Select whether the manipulator is to be mounted upright or inverted. The mounting kit can rotate through 360 degrees to allow for attachment to surfaces at different orientations.

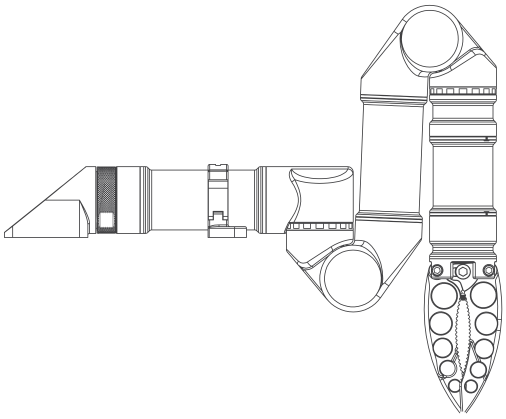

Figure 9: Inverted

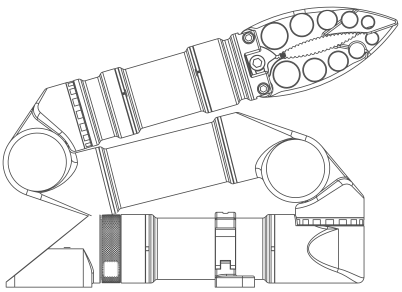

Figure 10: Upright

Step 2

Using the mounting kit hole dimensions (see mounting kit diagram on Page 18), secure the rear mounting bracket and the forward mounting bracket to the host platform surface. The rear mounting bracket can either be secured with 2 x M5 bolts from the top or with 4 x M4 bolts into the tapped holes on the bottom.

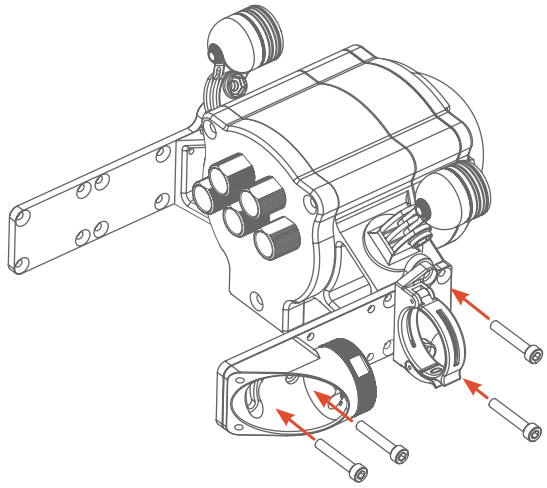

Figure 11: M5 from Top

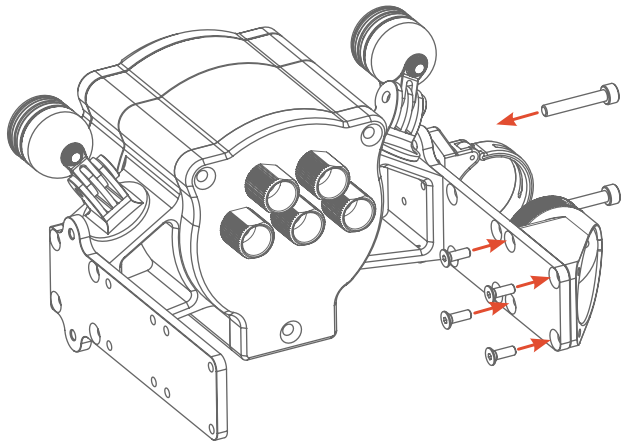

Figure 12: M4 From Bottom

Step 3

Attach the manipulator by feeding the base through the O-ring and securing it with locking nut at the desired orientation.

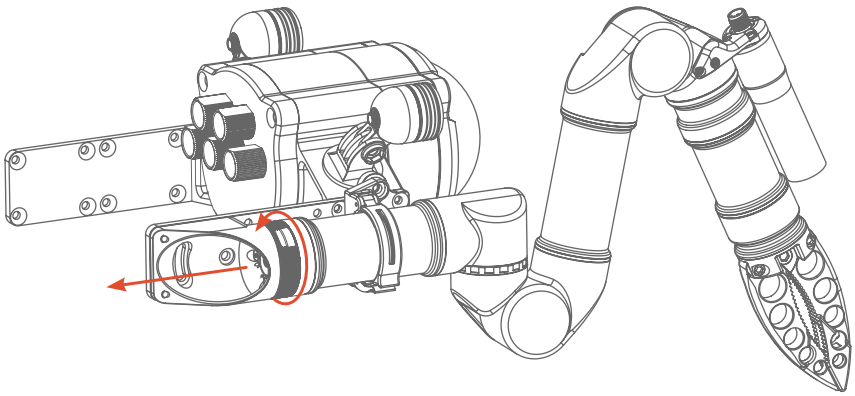

Figure 13: Insert through O-ring and Tighten Locking Nut

Step 4

Connect the manipulator cable by inserting the female Impulse connector and rotating the locking nut. Connect the manipulator to the host PC running Reach Control using the same steps given in Section 3, per your specific communication and power setup.

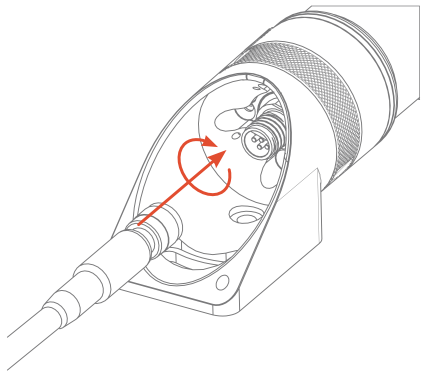

Figure 14: Insert Connector and Rotate Nut

4.3.2 Electrical

The standard interface for the Reach Alpha is a Teledyne 6-pin IE(W)-55 Impulse Connector. The mating connector is a Teledyne 6-pin IE(W)-55 Impulse CCP Connector. It is important that the serial device and the Reach Alpha share a common ground. Failing to do so could damage the device.

Note: If your whip has a **BROWN** cable this is a legacy configuration. Please contact Reach Robotics for the interface information.

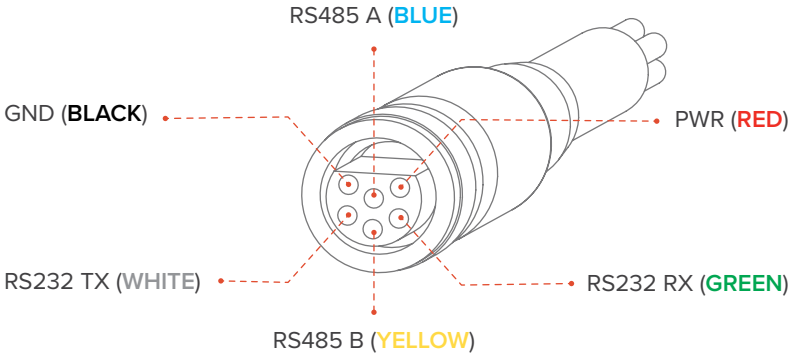

Figure 15: IMPULSE IE55 FEMALE Whip – Female Face View

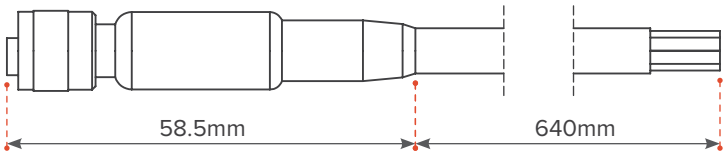

Figure 16: IMPULSE IE55 CCP Dimensions (mm)

4.3.3 Communication

The Reach Alpha communicates via a serial RS232 or RS485 interface. The serial connection should be configured via the Reach Control software suite or manually using the following specification.

Serial Specifications	
Baud	115200 bits/s
Word Length	8 bits (including parity)
Parity	None
Stop Bits	1

When using an RS232 device, the connection is Full Duplex, whilst when using RS485, it is Half Duplex. The Reach Alpha will respond to demands on either RS232 or RS485 without needing to be configured. Data being transmitted from the unit will be done via both COM ports. For more information on the serial protocol please contact Support at support@reachrobotics.com.

5 SERVICING AND REPAIRS

5.1 ALPHA SERVICING OVERVIEW

The Reach Alpha system is recommended for an OEM Servicing every one (1) year or 200 operational hours, whichever occurs first. Reach Robotics offer a capped price service with each new Reach Alpha system. The coverage period of the capped price service program is for a period of two (2) years, or 200 operational hours, whichever occurs first. For details on the Reach Robotics Service Program please contact Reach Robotics.

System Item Procedure Description

System	Item	Procedure Description
Subassembly Mechanical	O-rings	Replace
	Gears	Clean and re-lubricate
	Keyway systems	Check backlash and tune
	Crimps, connectors, and wire harness	Visually Inspect
	Internal Fasteners	Check if replacement required, apply Loctite
	Motors	Check output torque
Subassembly Electrical	Electrical Board	Check indicators and functionality
	Encoders	Visually Inspect and recalibrate if required.
	Encoder boards	Check indicators and functionality
Subassembly Software	Software Revision	Upgrade to latest software
	Configuration Settings	Check and update if required
	Kinematics	Check and update if required
Whole	Anodising	Check for dents or damage
	External fasteners	Check if replacement required
	Quality Control	Perform outgoing quality control and provide Certificate of Conformity

5.2 MODULE REPLACEMENT

In the instance a module needs to be replaced (such as swapping an end-effector between a grabber and a pan-tilt unit), please carefully follow the steps laid out below. It is recommended that you contact your supplier prior to performing this procedure if it is your first time.

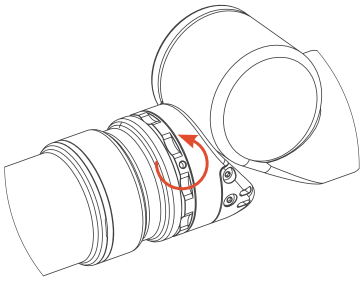

1. Loosen the M2.5 Grubscrew securing the locking nut at the base of the module you are replacing.

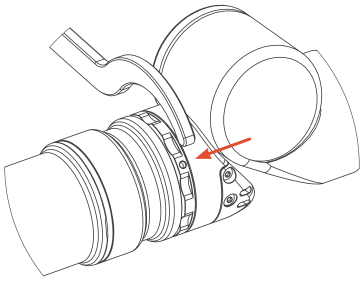

2. Insert the supplied spanner into one of the holes on the locking nut at the base of the module you are replacing.

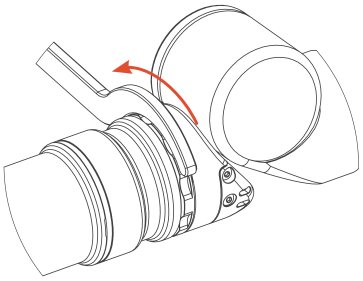

3. Rotate the spanner to loosen the nut.

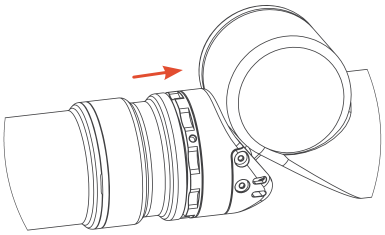

4. Push the male module into the female.

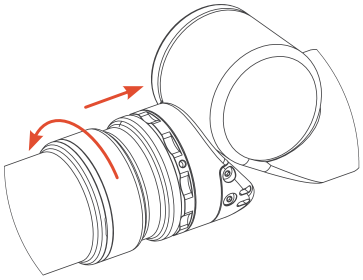

5. While pushing rotate 45 degrees. At 45 degrees carefully pull to remove.

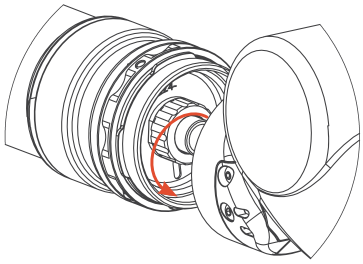

6. Loosen nut securing connector.

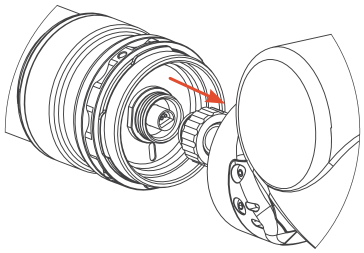

7. Remove connector plug by gently pulling on the cable.

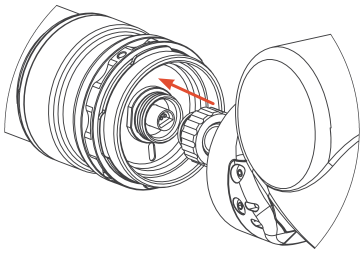

8. Apply grease to internal O-ring and male insert. Insert connector into new module by lining up the flat and pushing.

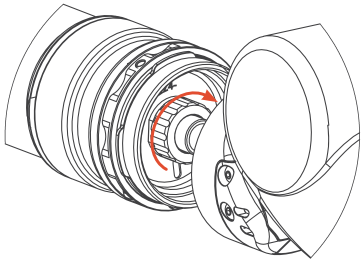

9. Tighten nut with fingers.

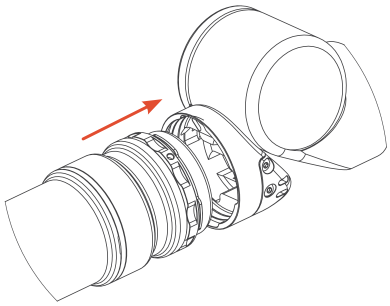

10. Line up bayonet teeth with female. Ensure the red dots are offset by 45 degrees. Insert male module into female. Ensure grease is applied to both surfaces.

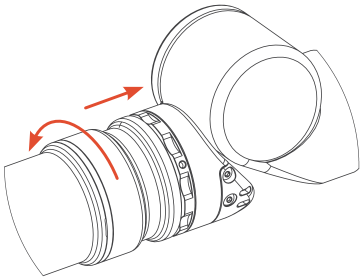

11. Rotate module to 45 degrees to align the red dots. Pull apart to feel teeth engage.

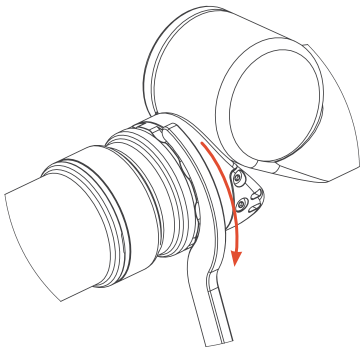

12. Tighten looking nut.

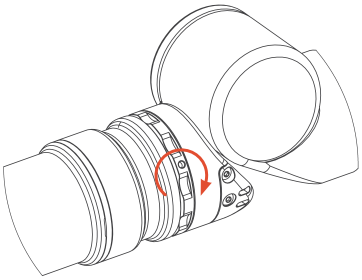

13. Tighten Grubscrew.